MADISON Bath shower set for bath rim or tile edge installation - Chrome

ST 030 100 3370

- spout: circular, air-enriched flow
- max. spout flow rate 23 l/min
- Hand shower: COMPACT RAIN, max. flow rate 6.8 l/min (at 3 bar)
- complete hand shower set with anti-scale system
- 225mm projection
- automatic bath/shower diverter
- height of mixer 185 mm
- height up to aerator 140 mm
- hole diameter valve 32 mm
- hole diameter spout 32 mm
- hole diameter for complete hand shower set 32 mm
- rosette for spout Ø 70mm
- rosette for complete hand shower set Ø 60mm
- rosette for deck valve Ø 60mm
- metal shower hose 1750mm with integrated anti-twist protection

Individual components of this set

You need the following components for this set

1x 27 502 370-00

2x 11 170 370-00

ST 030 100 3370

MADISON Bath shower set for bath rim or tile edge installation - Chrome

ST 030 100 3370

- 225mm projection
- complete hand shower set: normal flow
- spout: circular, air-enriched flow
- complete hand shower set with anti-scale system
- automatic bath/shower diverter
- height of mixer 185 mm
- height up to aerator 140 mm
- hole diameter valve 32 mm
- hole diameter spout 32 mm
- hole diameter for complete hand shower set 32 mm
- rosette for spout Ø 70mm
- rosette for complete hand shower set Ø 60mm
- rosette for deck valve Ø 60mm
- metal shower hose 1750mm with integrated anti-twist protection
- max. spout flow rate 23 l/min
- max. flow for complete hand shower set 6.8 l/min

Intrinsic protection against back flow.

Recommended miscellaneous

Perfecto installation kit - 12 614 970 90

MADISON Bath shower set for bath rim or tile edge installation - Chrome

ST 030 100 3370

mm [inches]
1:10

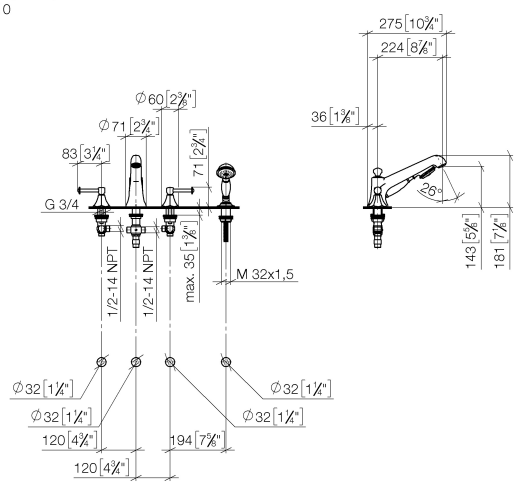

Flow rate chart

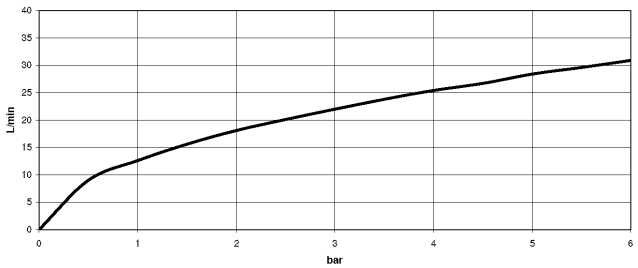

Codes & Standards

DIN 4109	EN 1717	ISO 3822	Ü-Zeichen

Certificates

LGA_8	Belgaqua_21-380-2

ST 030 100 3370

MADISON Bath shower set for bath rim or tile edge installation - Chrome

ST 030 100 3370

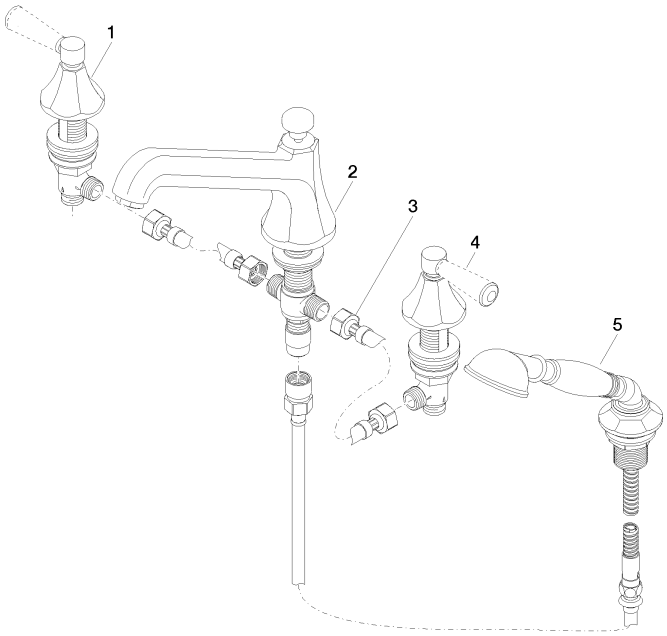

Spare parts list

No.	Item Number	Name	Quantity used	Delivery time
1	20 000 370-00	side panel	1	60
2	13 502 380-00	spout	1	60
3	12 502 970 90	High pressure hose 1/2" x 1/2" x 400 mm -	2	2
4	20 000 371-00	side panel	1	60
5	27 703 370-00	shower set	1	60

MADISON Bath shower set for bath rim or tile edge installation - Chrome

ST 030 100 3370

- for basin fittings

NOTE:Mixers are supplied without lever inserts.
Please order the lever inserts separately!

Chrome	11 170 370-00
Gold (23.9kt)	11 170 370-01
Brushed Platinum	11 170 370-06
Platinum	11 170 370-08
Durabrass (23kt Gold)	11 170 370-09
white	11 170 370-12
black	11 170 370-13
Brushed Durabrass (23kt Gold)	11 170 370-28
Brushed Dark Platinum	11 170 370-99

We reserve the right to change designs, product range and technical specifications without prior notice.
More information can be found at: www.dornbracht.com +49 (0) 2371 8899 900 mail@dornbracht.com

ST 030 100 3370

MADISON Bath shower set for bath rim or tile edge installation - Chrome

ST 030 100 3370

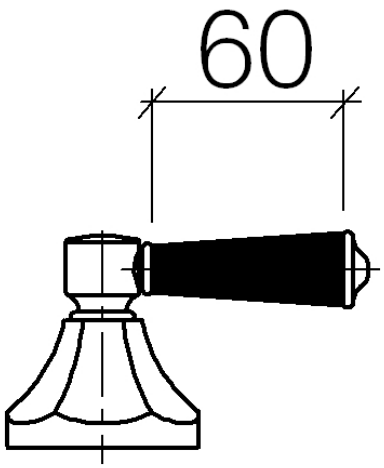

ST 030 100 3370

MADISON Bath shower set for bath rim or tile edge installation - Chrome

ST 030 100 3370

Parts for other
finishes can be found
here: Gold (23.9kt)

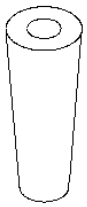

ST 030 100 3370